Because of permanent improvement of our products, drawings, descriptions, features used on these data sheets are for guidance only and can be modified without prior advice

8Z: 3 poles manual reset fail safe temperature limiters*, not current sensing, calibration up to 130°C (266°F), 6.35 tabs or screw terminals, rating 20(3.3) A 250V, 16(2.6)A 400V, to use when R290 highly flammable refrigerant classed A3 upon ISO 817 may be present. This is not Ex certified product but made specially for heat pumps applications

8Z30	8Z31	8Z32	8Z33
8Z36	8Z37	8Z38	8Z39

Mounting by M10×1 front bushing, vertical terminals (standard), type 8Z30 and 8Z36

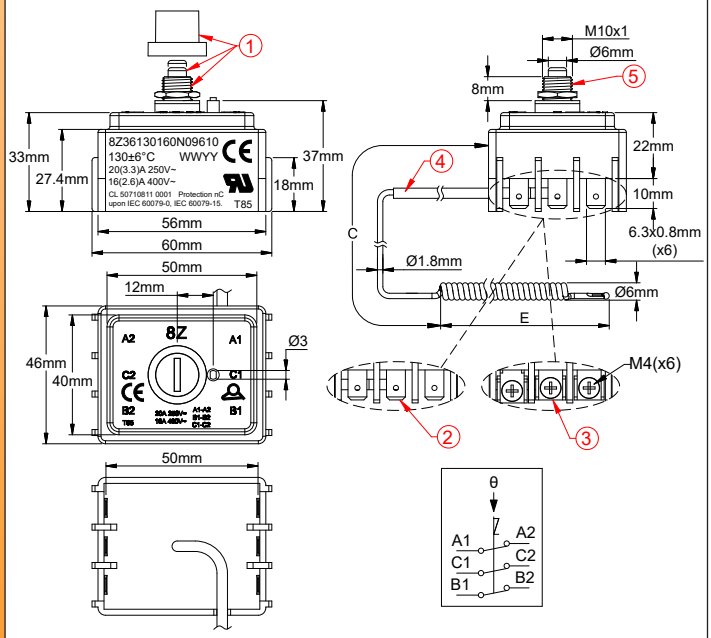

1: Manual reset button, M10 nut and protection cap
2: 6.3 × 0.8 brass terminal (option), 8Z36
3: M4 screw and saddle terminals (Standard), 8Z30
4: PVC sleeved copper capillary
5: M10×1 bush mounting

Mounting by M10×1 front bushing or mounting brackets, horizontal terminals, type 8Z31 and 8Z37

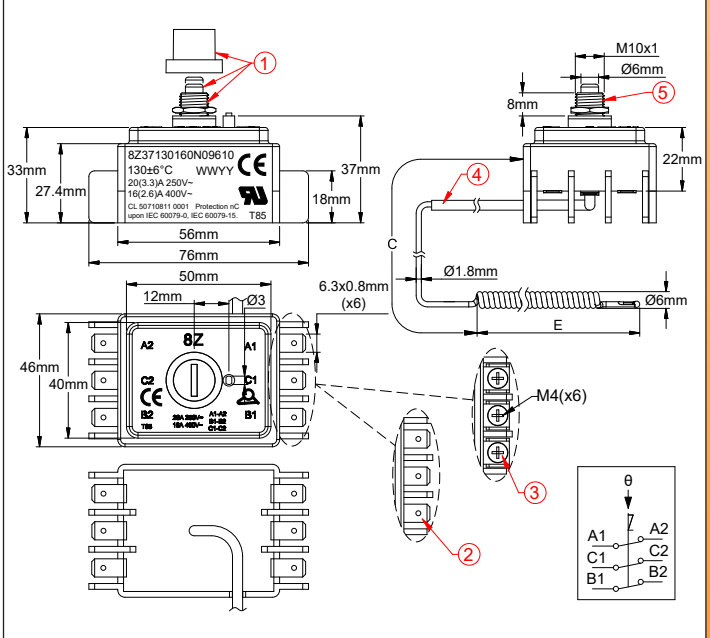

1: Manual reset button, M10 nut and protection cap
2: 6.3 × 0.8 brass terminal (option), 8Z37
3: M4 screw and saddle terminals (Standard), 8Z31
4: PVC sleeved copper capillary
5: M10×1 bush mounting

* : 1 and 2 poles are also available.

Mounting by rear bracket, vertical terminals (not recommended), type 8Z32 and 8Z38	Mounting by rear bracket, horizontal terminals, type 8Z33 and 8Z39
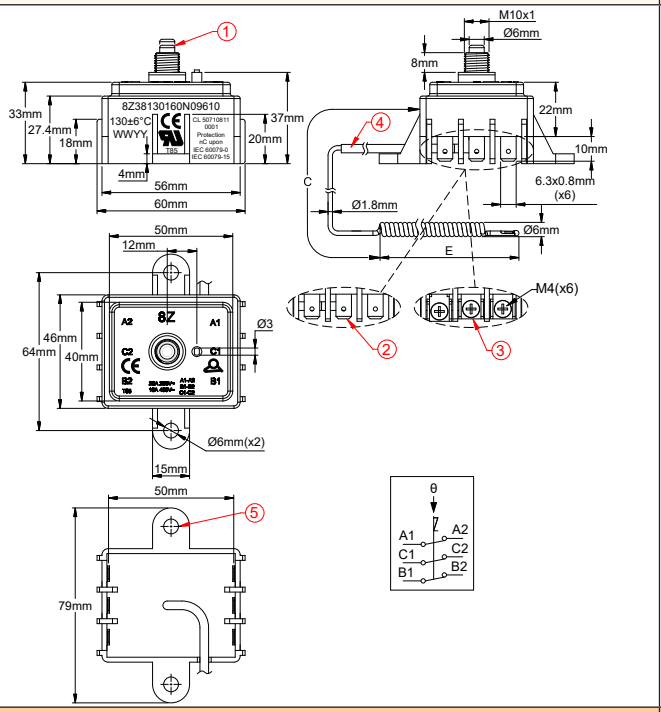	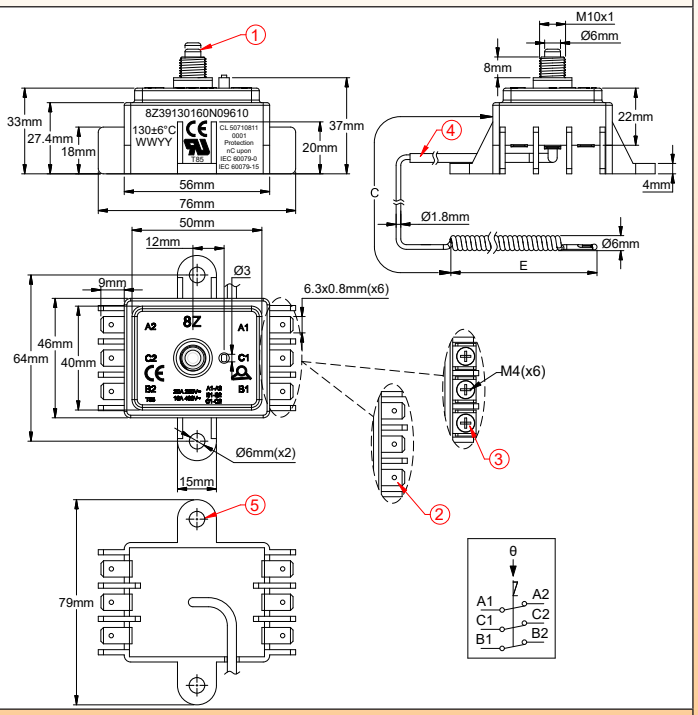
1: Manual reset button 2: 6.3 × 0.8 brass terminal (option), 8Z38 3: M4 screw and saddle terminals (Standard), 8Z32 4: PVC sleeved copper capillary 5: Wall mounting rear bracket	1: Manual reset button 2: 6.3 × 0.8 brass terminal (option), 8Z39 3: M4 screw and saddle terminals (Standard), 8Z33 4: PVC sleeved copper capillary 5: Wall mounting rear bracket

Main applications

General rules for installation:

Important note: Fully compliant for **heat pumps** and **water heater heat pumps** using **R290** refrigerant according to **EN60335-2-40** (Particular requirements for electrical heat pumps) – Arcs and sparks protection chapter.

General description:

This Thermal Cut Out was designed as a sealed device as per IEC 60079-15:2017.
The Thermal Cut Out met the requirements of IEC 60079-15: 2017 clause 9.
The Thermal Cut Out was examined and tested according to clause 26.5.1.2 of IEC 60079-0: 2017 and clause 11.2 of IEC 60079-15: 2017.
The Thermal Cut Out passed the test items, complies with the relevant clauses of IEC 60079-15: 2017 cited by IEC 60335-2-40: 2024 and UL 60335-2-40: 2022, applicable to appliance with A3 refrigerants.

Certification:

- **UL:** UL 60730-1, UL 60730-2-9, CAN/CSA E60730-1:15, UL/CSA E60730-2-9 (6,000 cycles)
- **CE:** LVD certified by TÜV, EN60730-1, EN60730-2-9 (6,000 cycles)
- **Explosive atmosphere** by TÜV according to standards and specific chapters above.
- **Registration No.:** CL 50710811 0001

Technical features

Housing dimensions: see drawings
Capillary: Copper, capillary length 500 or 900 mm. Black PVC sleeve on capillary. Capillary minimum bending radius 5 mm. For technical reasons, we do not recommend to use capillary length longer than 900 mm. We don't recommend 500mm long capillary for calibration temperature above 90°C (194°F)
Special lengths on request.
Bulb: Copper, corkscrew type for temperatures from 70 to 130°C (158 to 266°F).
Straight uncoiled capillary available on request
Temperature sensing element: Liquid-filled thermostatic assembly whose boiling causes tripping of the contact. Therefore, unlike liquid filled systems, these thermostats are sensitive to atmospheric pressure, and their reaction time is faster.
Terminals: Six 6.35 × 0.8 quick connect terminals, or 6 M4 input screw terminals with saddle. (Other terminals combinations are possible). Terminals can be horizontal or vertical
Adjustment: Fixed setting
Mounting: Front bushing, with M10 × 1 thread

Because of permanent improvement of our products, drawings, descriptions, features used on these data sheets are for guidance only and can be modified without prior advice

Manual reset: Fail safe action, front access button
Contacts: 3 poles single throw 20(3.3)A 250V, 16(2.6)A 400V snap action contact. Single pole and double pole available with same dimensions.
Max ambient temperature on head: 85°C (185°F). Must not be higher than calibration temperature -10°C (-18°F).
Acceptable degree of pollution for use in 250V: 3
Acceptable degree of pollution for use in 400V: 2

Main references with vertical terminals and M10×1 bush mounting, without rear bracket*

Model 8Z30		Calibration temperature (°C/°F)	Minimum resettable temperature (°C/°F)	Capillary length (C, mm)	Bulb diameter (D, mm)	Bulb length (E, mm)	Max temperature on bulb (°C/°F)
References with six 6.35 terminals	References with six M4 screw terminals						
8Z36070100N096N0	8Z30070100N096N0	70±5°C/158±9°F	30°C/86°F	900	6	50	100°C/212°F
8Z36070100N056N0	8Z30070100N056N0			500			
8Z36080110N096N0	8Z30080110N096N0	80±5°C/176±9°F	40°C/104°F	900	6	50	110°C/230°F
8Z36080110N056N0	8Z30080110N056N0			500			
8Z36090120N096N0	8Z30090120N096N0	90±5°C/194±9°F	50°C/122°F	900	6	50	120°C/248°F
8Z36090120N056N0	8Z30090120N056N0			500			
8Z36110140N096N0	8Z30110140N096N0	110±5°C/230±9°F	70°C/158°F	900	6	50	140°C/284°F
8Z36110140N056N0	8Z30110140N056N0			500			
8Z36120150N096N0	8Z30120150N096N0	120±6°C/248±11°F	80°C/176°F	900	6	60	150°C/302°F
8Z36120150N056N0	8Z30120150N056N0			500			
8Z36130160N096N0	8Z30130160N096N0	130±6°C/266±11°F	90°C/194°F	900	6	60	160°C/320°F
8Z36130160N056N0	8Z30130160N056N0			500			

* For others configurations, replace 8Z30 by the type provided on drawings on top of this page and also 61 by 60 for models with rear side bracket mounting.
** Maximum manual reset set point is 130°C±6°C. Ask for specific data sheets

Because of permanent improvement of our products, drawings, descriptions, features used on these data sheets are for guidance only and can be modified without prior advice